NATIONAL HIGH MAGNETIC FIELD LABORATORY

SCM4 / 32T
Dilution Refrigerator Single 16 DIP Probe

Units = mm [inch]
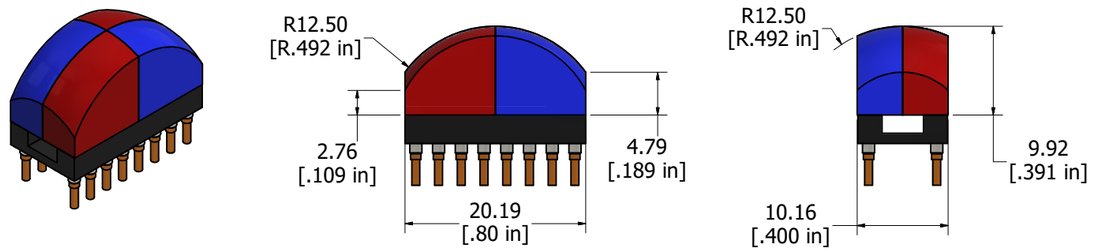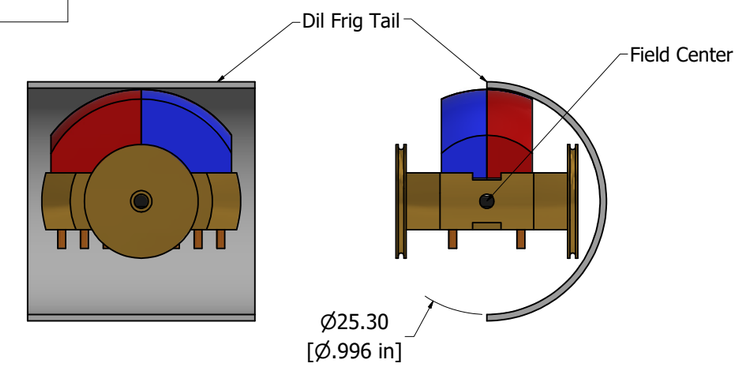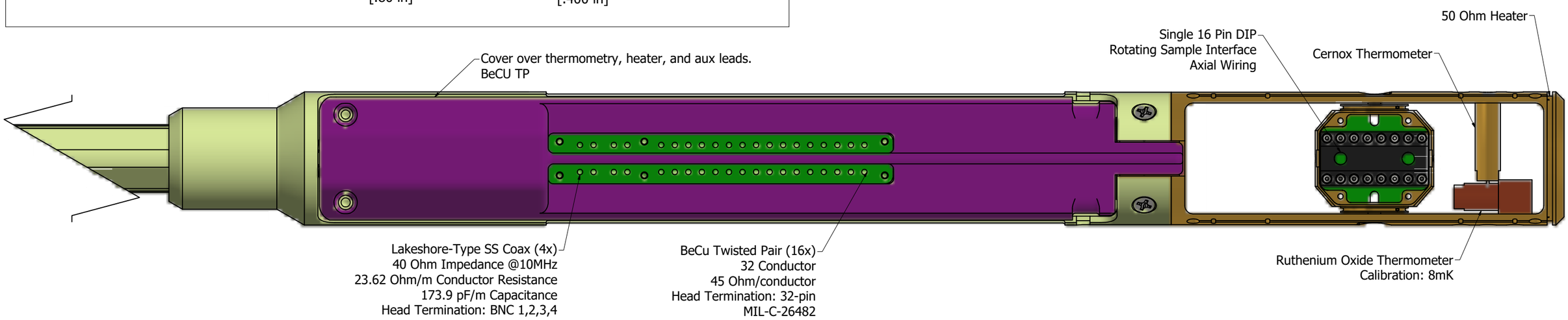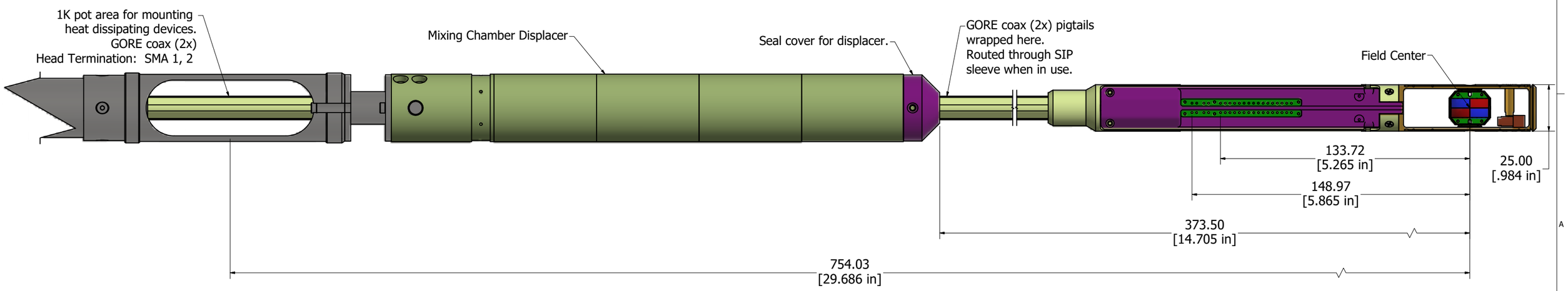
Maximum Sample Space Dimensions