NATIONAL HIGH MAGNETIC FIELD LABORATORY

SCM4 / 32T
Dilution Refrigerator Probe Overview
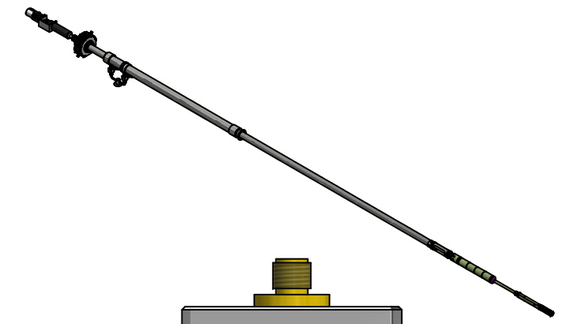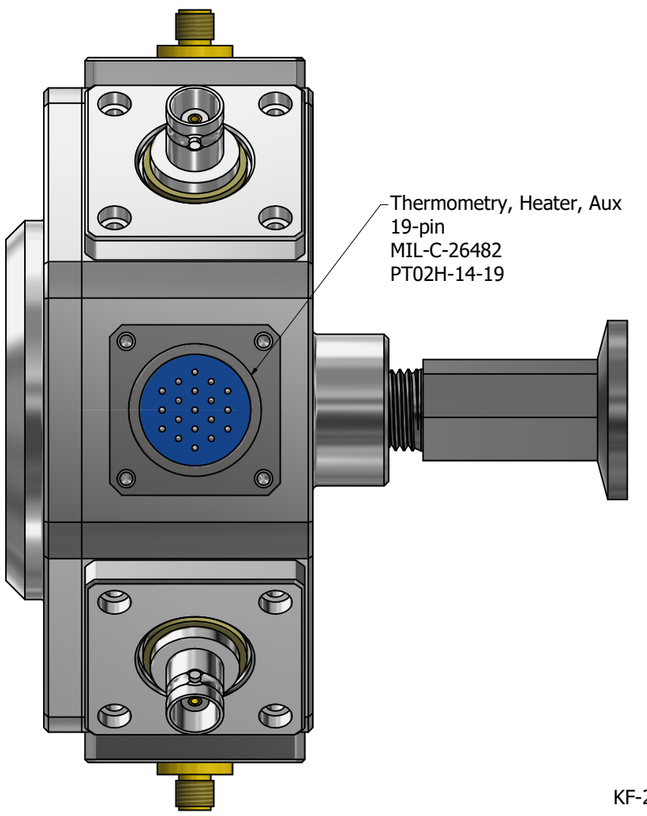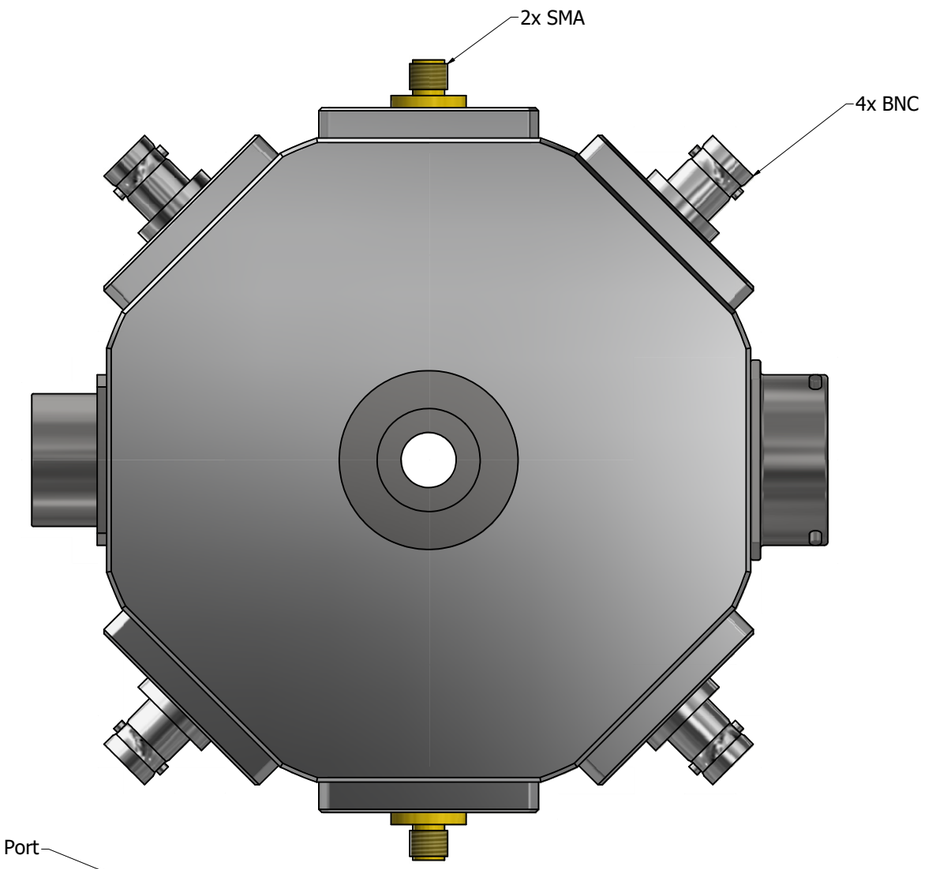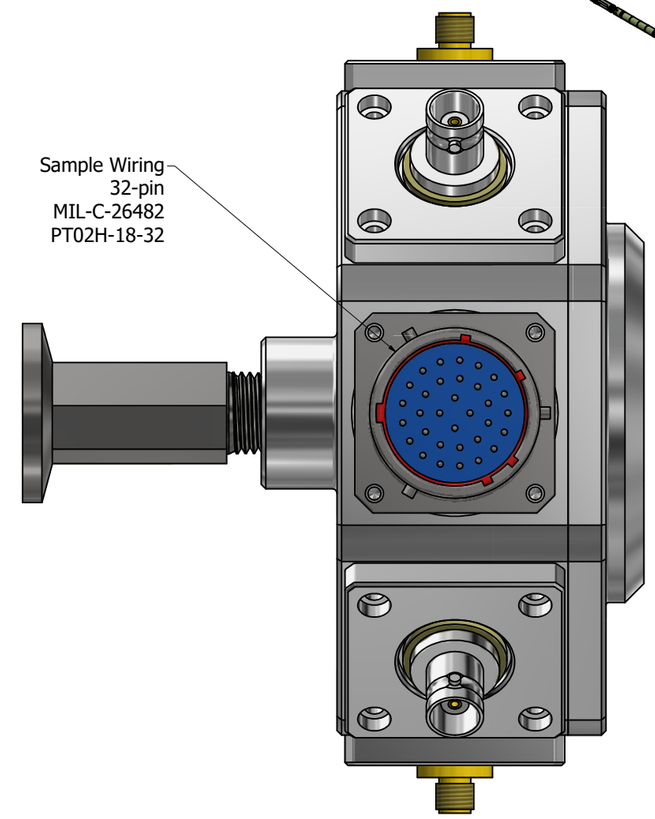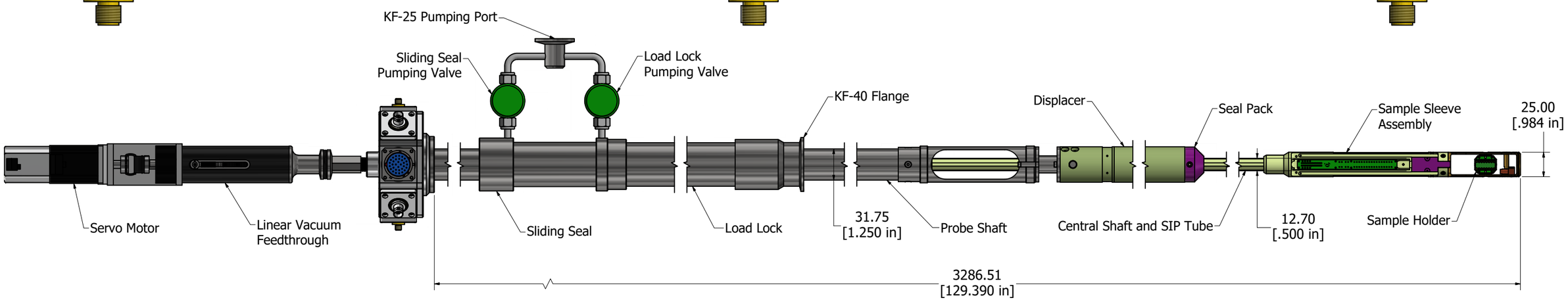
Units = mm [inch]