NATIONAL HIGH MAGNETIC FIELD LABORATORY

32T Superconducting Magnet VTI Dual 16 Pin DIP Probe
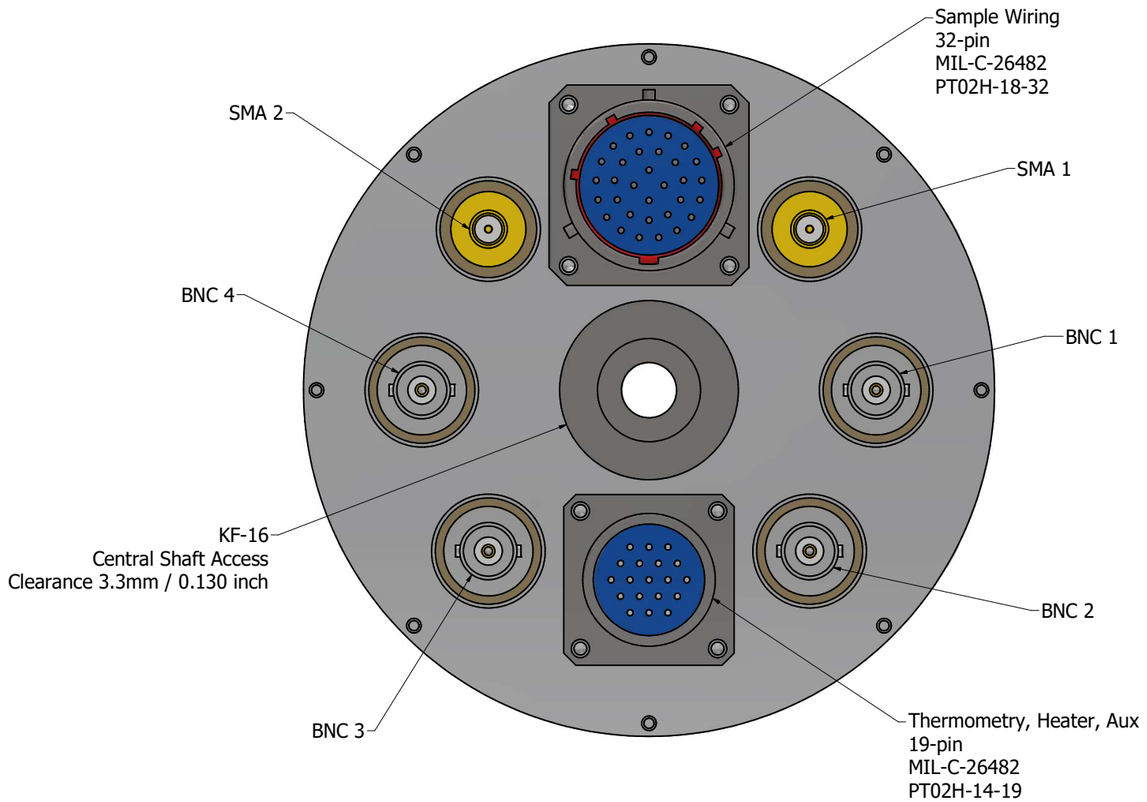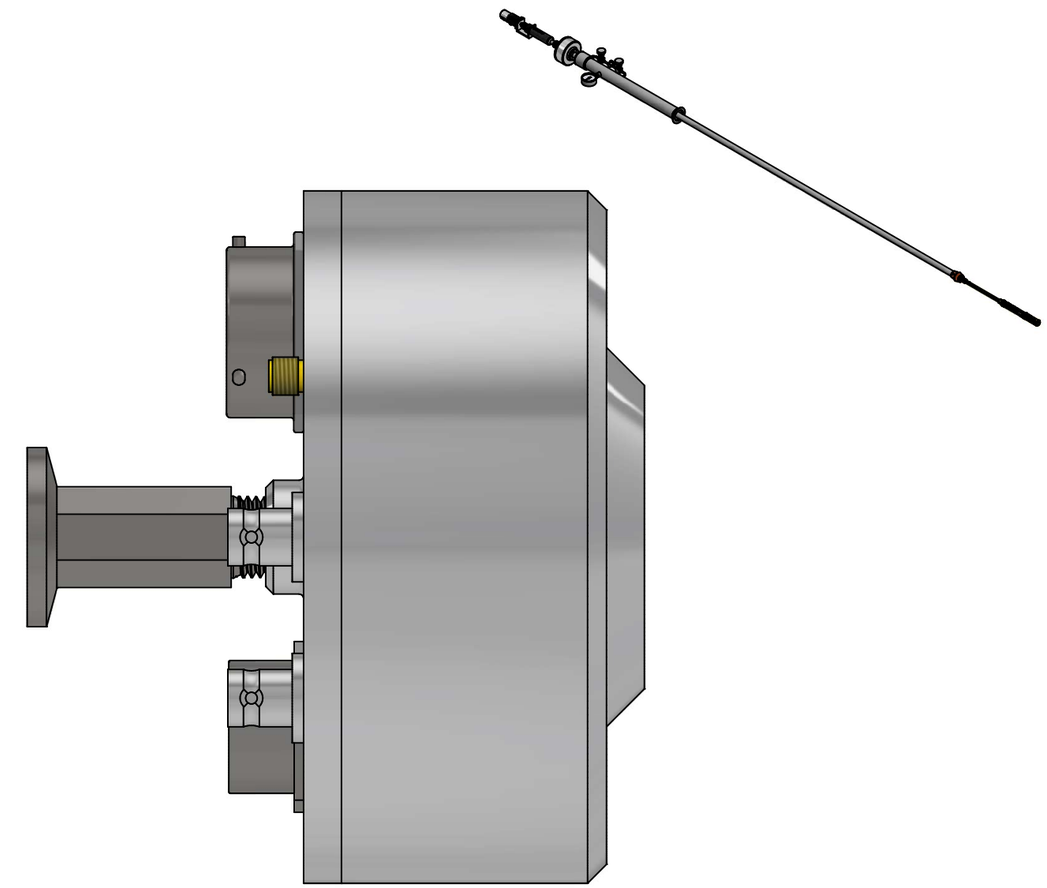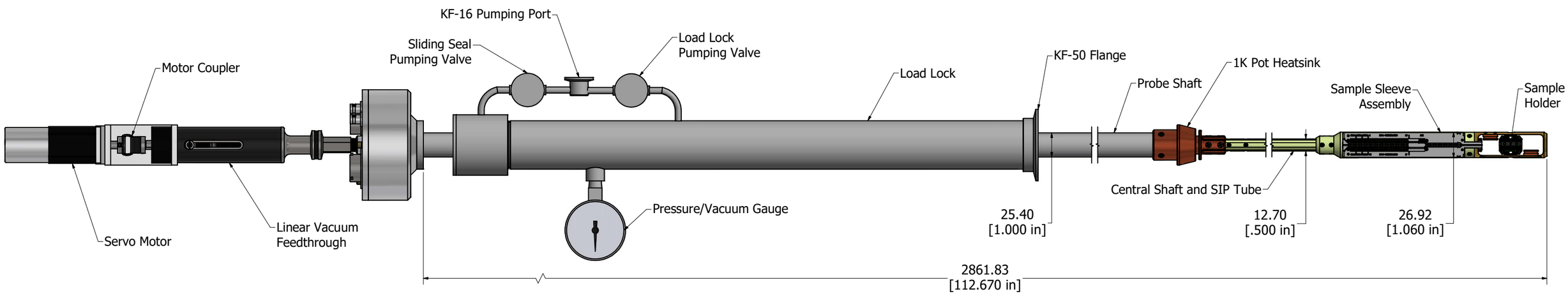
Units = mm [inch]